ALL WEATHER WINDOWS

FLASHING MATERIALS

FLEXIBLE FLASHING

Flexible flashing is typically a product consisting of two sheets of paper, reinforced with a waterresistant material. Flexible flashing materials are typically applied to the fenestration product with sealant or attached to the rough framing/sheathing with staples prior to the fenestration product being sealed to the face of the flashing. Flexible flashing must be at least 9" wide when used in conjunction with window and door installation.

ADHESIVE FLEXIBLE FLASHING

Adhesive flexible flashing is typically a product on which one side has a self-adhering surface. It is applied over the window or door flange to seal it. There is no need for stapling or nailing, and the most adhesive flashing adhere to wood, vinyl, aluminum and other substrates.

RIGID FLASHING (DRIP CAP)

Rigid flashing is typically aluminum or vinyl. It is often custom made to fit a particular window or door.

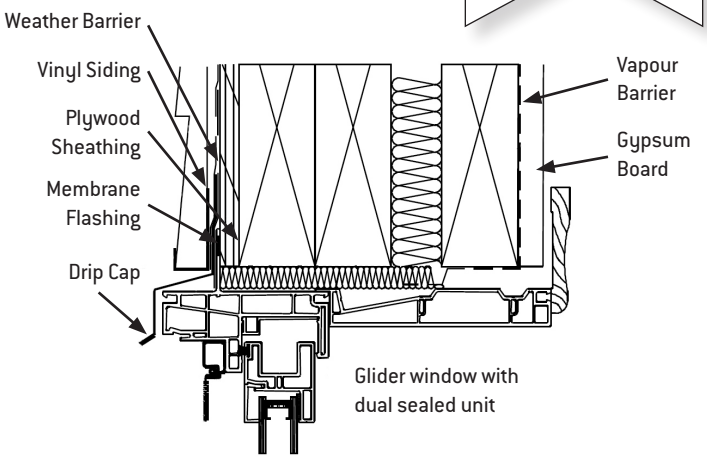

WEATHER RESISTANT BARRIER

The surface or surfaces of a wall responsible for preventing water infiltration into the building interior. In Surface Barrier Systems, the exterior-most surface is the weather resistant barrier. In membrane/Drainage Systems, the membrane applied behind the exterior surface is the weather resistant barrier.

FLASHING METHODS

Installation Methods are based on AAMA (American Architectural Manufactures) and the InstallationMasters™ Program. This program promotes four types of wall/window interface using a minimum of 9-inch wide flexible flashings. Based on dwellings not exceeding three storeys.

METHOD A

- Jamb flashing will be applied AFTER the window or OVER the face mounting flange
- Weather resistant barrier (WRB) is to be applied AFTER the window installation

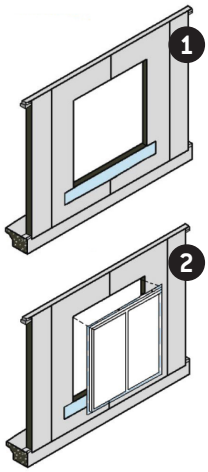

Install sill flashing flush with top of the rough opening sill. Fasten only at the top to allow weather-barrier to be slid under later. Apply a liberal bead of flexible sealant to the backside of the nailing flange directly over the pre-punched holes. (Ensure sealant is compatible with window material type, i.e. pvc) Alternatively: Apply sealant to the wall where window flange will meet the line of pre-punched holes. (fig. 1)

Apply shims to sill as per available diagrams. Shims are used to transfer structural load to the rough opening. Ensure window is centered in the opening and is level, plumb and square. (fig. 2)

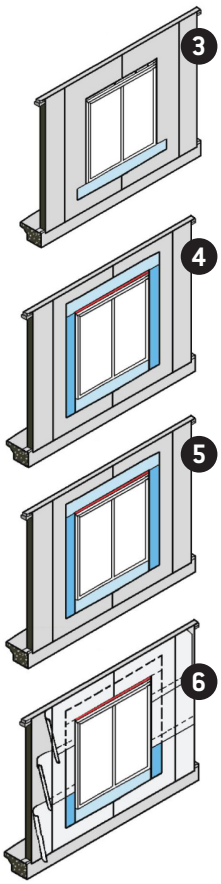

Fasten windows through pre-punched holes. Nail every 12" to 16" around the perimeter. Note: Do not nail within 4" of a corner. Fastener head should not compress or distort the window flange. The nails shall be with truss or flat heads and the shank shall not exceed the slotted holes. The window shall be allowed to expand and contract. (fig. 3)

Run a continuous bead of sealant over all the prepunched holes and the heads of all fasteners. Run a horizontal bead approximate 8 1/2" up above the head of the window. Install jamb flashing compressed into the sealant. (fig. 4)

Install head flashing compressed into sealant. Install properly profiled drip cap extending 1\2 inch passed each side of window for run off. (fig. 5)

Install Weather barrier in shingled fashion with proper overlap distances. Research proper weather barriers to ensure compatibility with the system. (fig. 6)

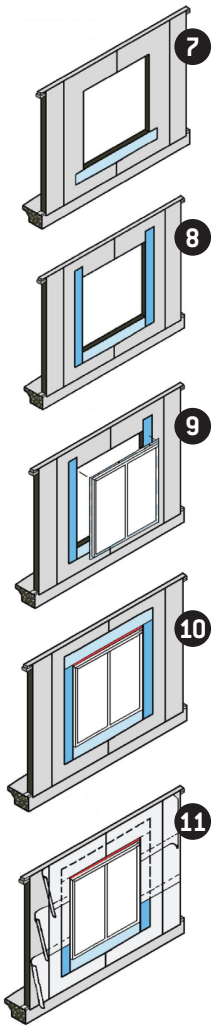

METHOD B

- Jamb flashing will be applied BEFORE the window or BEHIND the face mounting flange
- Weather resistant barrier (WRB) is to be applied AFTER the window installation

Install sill flashing flush with top of the rough opening sill. Fasten only at the top to allow weather-barrier to be slid under later. (fig. 7)

Install jamb flashing to the wall. Apply a liberal bead of flexible sealant to the backside of the nailing flange (all four sides) directly over the pre-punched holes. Ensure sealant is compatible with window material type, i.e. pvc (fig. 8)

Alternatively: Apply sealant to the wall where window flange will meet the line of pre-punched holes. Apply shims to sill as per available diagrams. Shims are used to transfer structural load to the rough opening. Ensure window is centered in the opening and is level, plumb and square. (fig. 9)

Install flexible head flashing compressed into sealant. Install properly profiled drip cap extending 1\2 inch passed each side of window for run off. (fig. 10)

Install Weather barrier in shingled fashion with proper overlap distances. Research proper weather barriers to ensure compatibility with the system. (fig. 11)

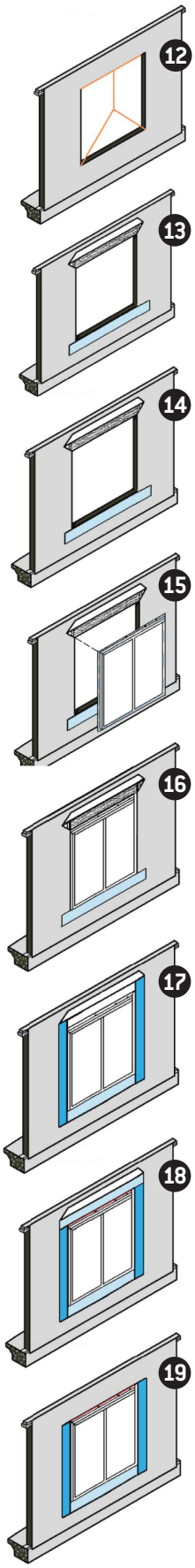

METHOD A1

- Weather resistant barrier (WRB) is to be applied FIRST or BEFORE the window installation
- Applies to Method A or Method B

Cuts in this barrier are made as shown as a modified I. It is then folded back and stapled inside the rough opening. (fig. 12)

The head of the opening is cut at a 45° angle back from each corner. Far enough to allow the 9" flashing to fit within. This flap is then tacked up and out of the way. Standard A or B method is then used. (fig. 13)

Install sill flashing flush with top of the rough opening sill. Fasten only at the top to allow weather-barrier to be slid under later. Apply a liberal bead of flexible sealant to the backside of the nailing flange directly over the pre-punched holes. (Ensure sealant is compatible with window material type, i.e. pvc) Alternatively: Apply sealant to the wall where window flange will meet the line of pre-punched holes. (fig. 14)

Apply shims to sill as per available diagrams. Shims are used to transfer structural load to the rough opening. Ensure window is centered in the opening and is level, plumb and square. (fig. 15)

Fasten windows through pre-punched holes. Nail every 12" to 16" around the perimeter Note: Do not nail within 4" of a corner. Fastener head should not compress or distort the window flange. The nails shall be with truss or flat heads and the shank shall not exceed the slotted holes. The window shall be allowed to expand and contract. (fig. 16)

Run a continuous bead of sealant over all the prepunched holes and the heads of all fasteners. Run a horizontal bead approximate 8 1/2" up above the head of the window. (fig. 17)

Install jamb flashing compressed into the sealant. Install head flashing compressed into sealant. Install properly profiled drip cap extending 1\2 inch passed each side of window for run off. (fig. 18)

The final step to Method A1 is to fold down the weather barrier and tape it down with appropriate compatible product. (fig. 19)

Note: Method B1 is similar to Method A1. The difference is that side flashing is installed prior to window.